SPECIFICATION SHEET : TMB108RT21XX2NS54P1M16XP-G

This Is An Original Product From Fulham (India) Pvt., Ltd.

Description: 226.8W Rectangle LED Module / 430x230MM / 108LEDs / S54P1 2Channel

This LED Module Should be Operated On:

Any LED Driver designed to provide output Current of 700mA and Voltage 162Vdc per channel.

ELECTRICAL DATA

NOMINAL INPUT VOLTAGE (V_{DC})	2X162
NOMINAL INPUT CURRENT (mA)	2X700
NOMINAL POWER CONSUMPTION(W)	2X113.4=226.8
PCB SIZE (mm)	RECTANGLE 430x230
PCB MATERIAL TYPE	MCPCB
CCT	5700K
CALCULATED USABLE ARRAY FLUX (lm)	2X14040=28080
RECOMMENDED ATTACHMENT METHOD	M3 Pan Head Screw
WEIGHT (gm)	200
MAXIMUM STORAGE TEMPERATURE (°C)	-40 to 100
MAXIMUM OPERATING AMBIENT TEMPERATURE (°C)	-35 to 50
MAXIMUM Tc (°C)	105
BEAM ANGLE	120°
CRI (Typ)	80

DISCONTINUED

MECHANICAL DATA

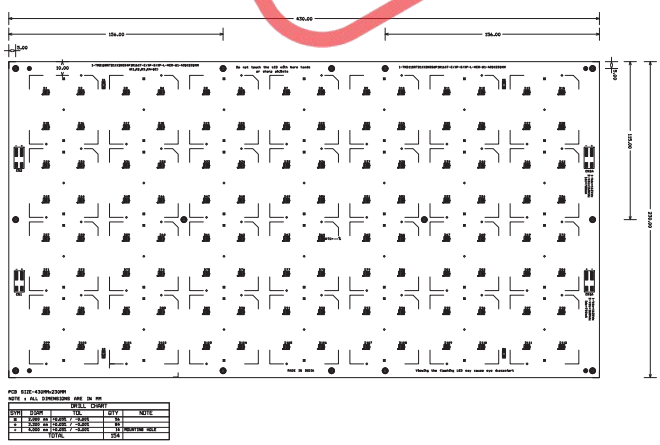

WIRING DIAGRAMS

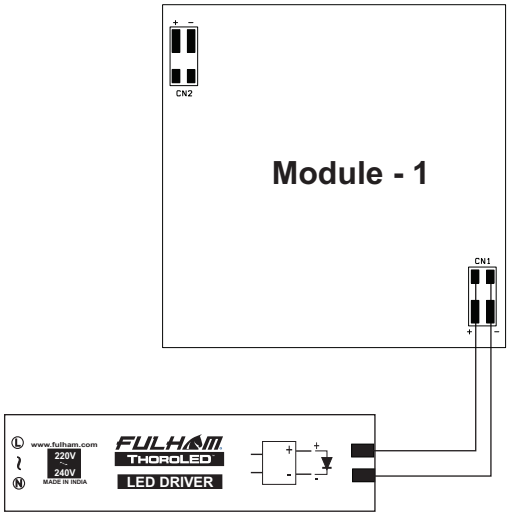

Driver must be grounded (if applicable).

Fulham extends a limited warranty only to the original purchaser or to the first user for a period of 3 years from the date of manufacture when properly installed and operated under normal conditions of use. For complete terms and conditions, please reference the Fulham product catalog (www.fulham.com)
Due to a program of continuous improvement, Fulham reserves the right to make modifications or variations in design or construction to the equipment described. © Fulham Company Limited, All Rights Reserved.